# DISMANTLING JOINT
# T-KBz (F3)

| *Nominal pressure:* | *Flange connection:* | *Hygienic cert. PZH:* |
|---|---|---|
| ***PN 10/16/25/40*** | ***ISO 2531*** | ***HK/W/0256/01/2007*** |

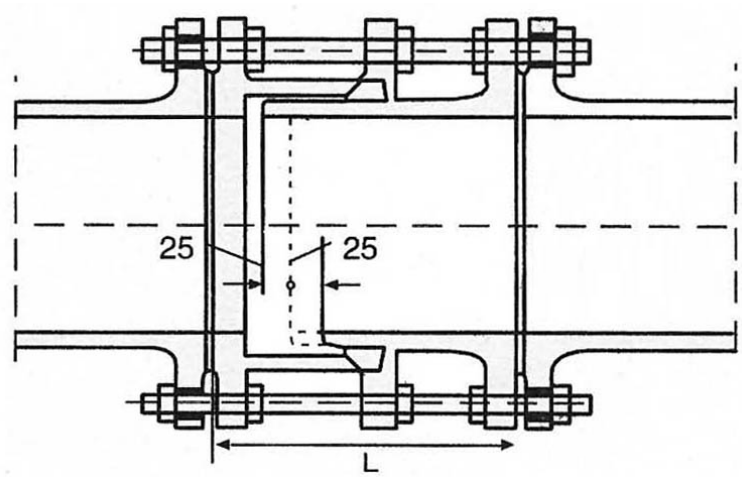


**Dismantling Joint T-KBz (F3)**, lockable pieces, designed for installation and removal of fittings and valves.

Sealing: *EPDM*
Material: Ductile Iron GGG-40
Bolts (DIN 957) and Nuts: *zinc plated*
Anticorrosion protection (OPTIONS):

- *internally and externally coated with bitumen, admitted to contact with drinking water*
- *epoxy powder coating EKB (electrostatic plastic coating, according to RAL-G2662)*

| | |
|---|---|
| **Tensil Strength** | Min. 420 N/mm$^2$ |
| **Elongation** | Min. 5% |
| **Proof Stress** | Min. 300 N/mm$^2$ |
| **Hardless** | Max. 250 HB |

| DN | dimensions L [mm] | | | | weight [kg] | | | |
|---|---|---|---|---|---|---|---|---|
| | PN | | | | PN | | | |
| | 10 | 16 | 25 | 40 | 10 | 16 | 25 | 40 |
| 100 | 200 | 200 | 220 | 240 | 28 | 29 | 43 | 54 |
| 150 | 200 | 200 | 230 | 250 | 45 | 47 | 70 | 89 |
| 200 | 220 | 220 | 230 | 250 | 64 | 69 | 101 | 128 |
| 250 | 230 | 230 | 250 | 270 | 84 | 101 | 137 | 175 |
| 300 | 250 | 250 | 250 | 270 | 95 | 122 | 182 | 253 |
| 350 | 260 | 260 | 270 | 290 | 126 | 169 | 260 | 374 |
| 400 | 270 | 270 | 280 | 300 | 162 | 211 | 325 | 462 |
| 450 | 270 | 270 | 280 | 300 | 182 | 247 | 364 | 515 |
| 500 | 280 | 280 | 300 | 320 | 211 | 312 | 429 | 612 |
| 600 | 300 | 300 | 320 | 340 | 267 | 436 | 572 | 842 |
| 700 | 300 | 300 | 340 | 420 | 390 | 555 | 870 | 1301 |
| 800 | 320 | 320 | 360 | 450 | 533 | 720 | 1200 | 1811 |
| 900 | 320 | 320 | 380 | 480 | 612 | 825 | 1335 | 1980 |
| 1000 | 340 | 340 | 400 | 500 | 675 | 1080 | 1920 | 3243 |
| 1200 | 360 | 360 | 450 | 500 | 1125 | 1665 | 2807 | 4443 |

**- INNE WYKONANIA NA ZAPYTANIE -**